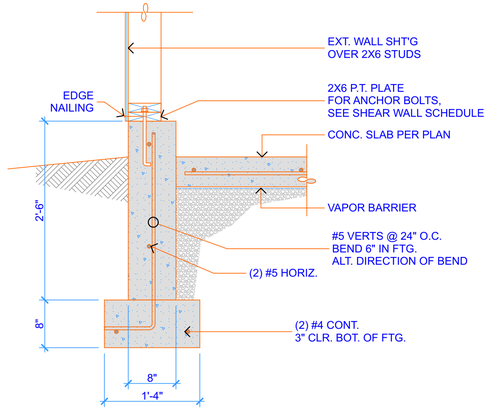

1 S300 SCALE: 1"=1'-0"

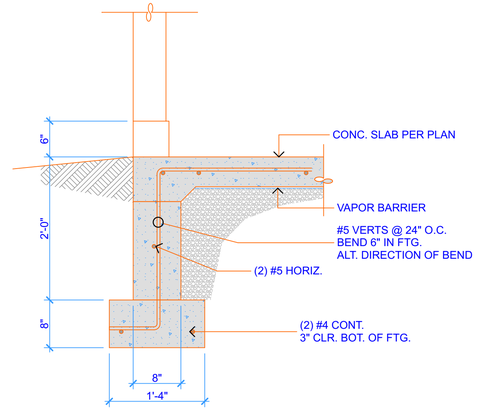

2 S300 SCALE: 1"=1'-0"

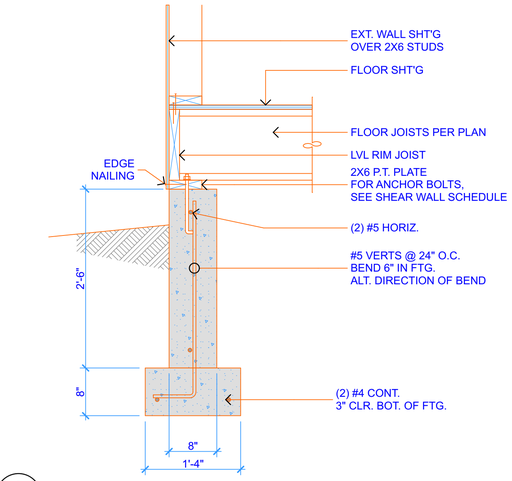

3 S300 SCALE: 1"=1'-0"

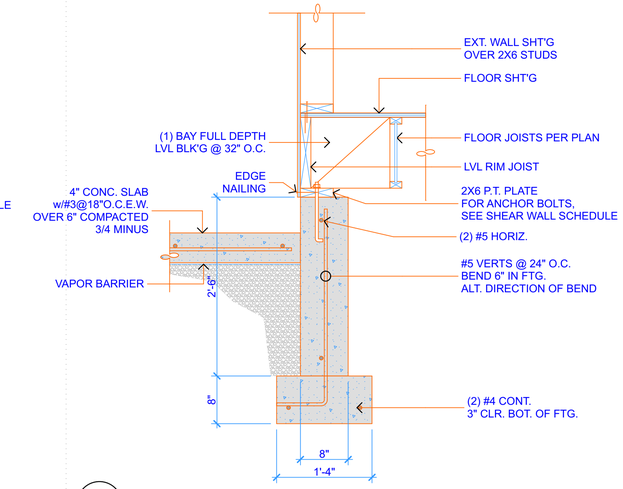

4 S300 SCALE: 1"=1'-0"

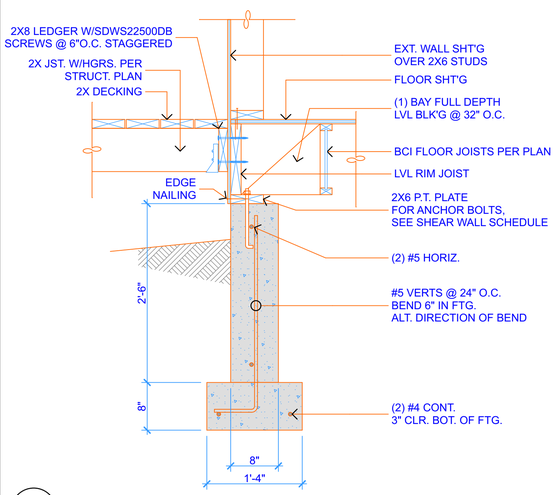

5 S300 SCALE: 1"=1'-0"

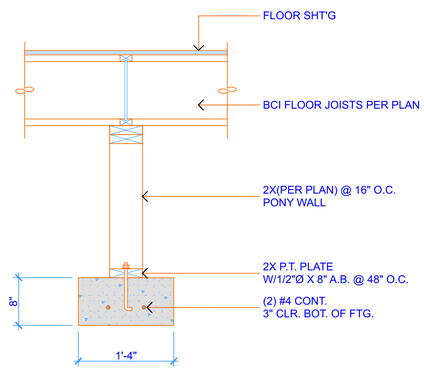

6 S300 SCALE: 1"=1'-0"

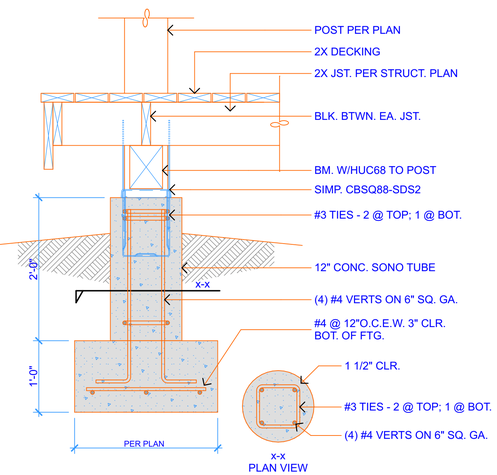

7 S300 SCALE: 1"=1'-0"

DETAIL NOT USED

8 S300 SCALE: 1"=1'-0"

DETAIL NOT USED

9 S300 SCALE: 1"=1'-0"

10 S300 SCALE: 1"=1'-0"

DETAIL NOT USED

11 S300 SCALE: 1"=1'-0"

DETAIL NOT USED

12 S300 SCALE: 1"=1'-0"

STRUX
ENGINEERING LLC
PO Box 324
31448 Dixie Creek Rd
Prineville, OR 97754
engineer@struxengineering.com

ARCH COTTAGE TOWNHOMES - UNIT 1

SUNBEAM SUBDIVISION HAILEY, IDAHO

STRUCTURAL DETAILS

REVISIONS	
05/05/2023	DESIGN REVIEW

PRINT DATE
5/10/23

DRAWING SCALE
AS NOTED

S300